19 Nov 2022
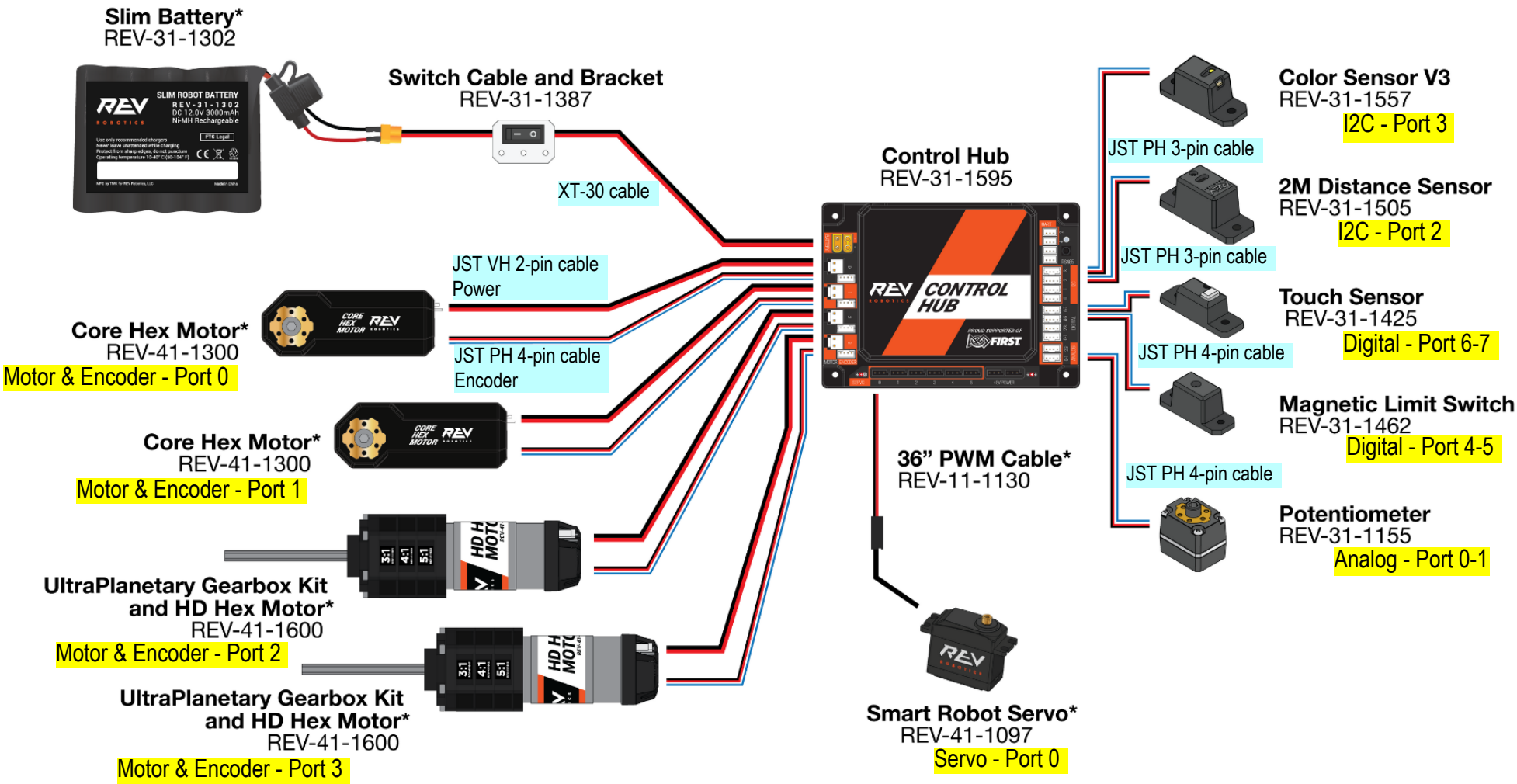
Control Hub - Ports for Parts